ITEM	QTY -011	P/N	DESCRIPTION
	X	**D5337-011**	**BASKET ASSEMBLY, LH**
1	2	D2535	SPRING
2	2	D2537	BUSHING
3	10	D3917-3	WASHER
4	2	D3953-3	GAS SPRING STUD, LID
5	2	D3953-7	GAS SPRING SPACER
6	2	D3953-9	GAS SPRING WASHER
7	2	D3953-17	GAS SPRING SPACER
8	1	D3953-19	GAS SPRING BRACKET
9	1	D3953-21	GAS SPRING BRACKET
10	1	D3969-3	SPRING
11	1	D5319-200	PLACARD, MAX LOAD
12	1	D5322-041	HANDLE WELDMENT
13	4	D5323-1	BUMPER
14	1	D5324-1	DRAG BRACKET
15	1	D5331-041	BASKET BASE ASSY, LH
16	1	D5336-041	BASKET LID ASSY
17	1	D5336-043	BASKET LID ASSY, LH
18	2	AN3-7A	BOLT
19	4	AN3-13A	BOLT
20	2	AN3-16A	BOLT
21	2	AN310C4	NUT, CASTELLATED
22	5	AN310-4	NUT, CASTELLATED
23	5	AN4-12	BOLT
24	1	AN4-12A	BOLT
25	4	AN5-17A	BOLT
26	4	MS20600AD4W3	RIVET, BLIND
27	8	MS21042L3	NUT, SELF-LOCKING
28	1	MS21042L4	NUT, SELF-LOCKING
29	4	MS21042L5	NUT, SELF-LOCKING
30	5	MS24665-151	COTTER PIN
31	2	MS24665-300	COTTER PIN
32	12	NAS1149F0332P	WASHER
33	2	NAS1149C0432R	WASHER
34	4	NAS1149FN432P	WASHER
35	12	NAS1149F0432P	WASHER
36	4	NAS1149F0563P	WASHER
37	4	97447A010	RIVET, SOLID, PAN HEAD

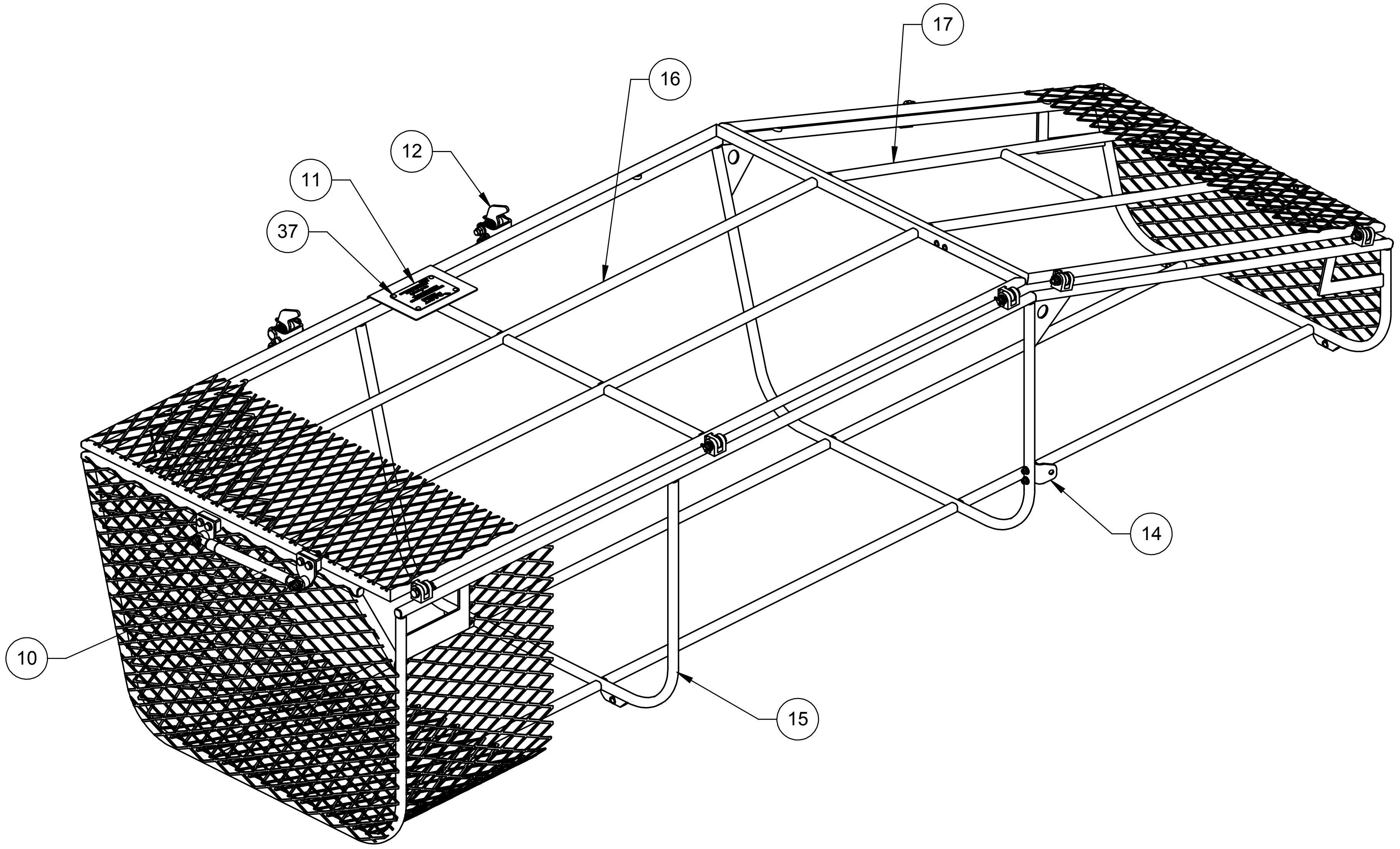

D5337-011 BASKET ASSEMBLY, LH

NOTES:
1) MATERIAL: N/A
2) FINISH: NONE
3) TOLERANCES: PER DART QSI 018 UNLESS OTHERWISE NOTED
4) UNITS: INCHES UNLESS OTHERWISE NOTED
5) BREAK SHARP EDGES: 0.005 TO 0.010 MAX
6) IDENTIFICATION: N/A
7) WEIGHT: 42.65 lbs

PRELIMINARY ISSUE

REV.	DESCRIPTION	BY	DATE
A	NEW ISSUE	RF	15.08.10

DESIGN	RF	**DART AEROSPACE LTD** HAWKESBURY, ONTARIO, CANADA
DRAWN	RF	
CHECKED	AK	DRAWING NO. D5337 REV. A2 SHEET 1 OF 5
MFG. APPR.	DD	
APPROVED		TITLE R66/R44 BASKET ASSEMBLY SCALE NTS
DE APPR.		
DATE	15.08.10	

COPYRIGHT © 2015 BY DART AEROSPACE LTD
THIS DOCUMENT IS PRIVATE AND CONFIDENTIAL AND IS SUPPLIED ON THE EXPRESS CONDITION THAT IT IS NOT TO BE USED FOR ANY PURPOSE OR COPIED OR COMMUNICATED TO ANY OTHER PERSON WITHOUT WRITTEN PERMISSION FROM DART AEROSPACE LTD.

ITEM	QTY -012	P/N	DESCRIPTION
	X	**D5337-012**	**BASKET ASSEMBLY, RH**
1	2	D2535	SPRING
2	2	D2537	BUSHING
3	10	D3917-3	WASHER
4	2	D3953-3	GAS SPRING STUD, LID
5	2	D3953-7	GAS SPRING SPACER
6	2	D3953-9	GAS SPRING WASHER
7	2	D3953-17	GAS SPRING SPACER
8	1	D3953-19	GAS SPRING BRACKET
9	1	D3953-21	GAS SPRING BRACKET
10	1	D3969-3	SPRING
11	1	D5319-200	PLACARD, MAX LOAD
12	1	D5322-041	HANDLE WELDMENT
13	4	D5323-1	BUMPER
14	1	D5324-1	DRAG BRACKET
15	1	D5331-042	BASKET BASE ASSY, RH
16	1	D5336-041	BASKET LID ASSY
17	1	D5336-044	BASKET LID ASSY, RH
18	2	AN3-7A	BOLT
19	4	AN3-13A	BOLT
20	2	AN3-16A	BOLT
21	2	AN310C4	NUT, CASTELLATED
22	5	AN310-4	NUT, CASTELLATED
23	5	AN4-12	BOLT
24	1	AN4-12A	BOLT
25	4	AN5-17A	BOLT
26	4	MS20600AD4W3	RIVET, BLIND
27	8	MS21042L3	NUT, SELF-LOCKING
28	1	MS21042L4	NUT, SELF-LOCKING
29	4	MS21042L5	NUT, SELF-LOCKING
30	5	MS24665-151	COTTER PIN
31	2	MS24665-300	COTTER PIN
32	12	NAS1149F0332P	WASHER
33	2	NAS1149C0432R	WASHER
34	4	NAS1149FN432P	WASHER
35	12	NAS1149F0432P	WASHER
36	4	NAS1149F0563P	WASHER
37	4	97447A010	BLIND RIVET, PAN HEAD

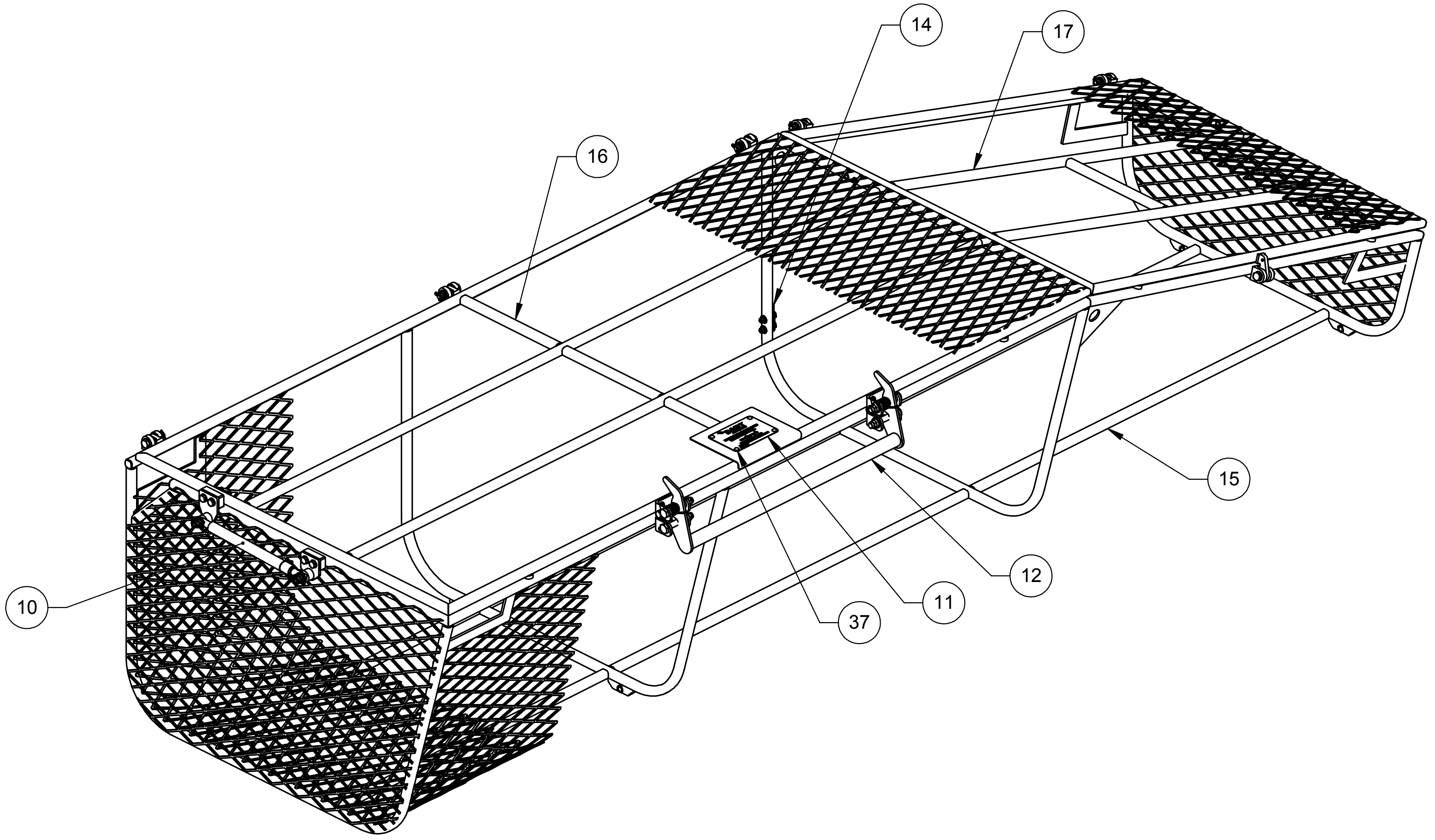

D5337-012 BASKET ASSEMBLY, RH

NOTES:
1) MATERIAL: N/A
2) FINISH: NONE
3) TOLERANCES: PER DART QSI 018 UNLESS OTHERWISE NOTED
4) UNITS: INCHES UNLESS OTHERWISE NOTED
5) BREAK SHARP EDGES: 0.005 TO 0.010 MAX
6) IDENTIFICATION: N/A
7) WEIGHT: 42.65 lbs

PRELIMINARY ISSUE

DESIGN	RF	**DART AEROSPACE LTD** HAWKESBURY, ONTARIO, CANADA
DRAWN	RF	
CHECKED	AK	DRAWING NO. D5337 REV. A2 SHEET 2 OF 5
MFG. APPR.	DD	
APPROVED		TITLE R66/R44 BASKET ASSEMBLY SCALE NTS
DE APPR.		
DATE	15.08.10	

COPYRIGHT © 2015 BY DART AEROSPACE LTD
THIS DOCUMENT IS PRIVATE AND CONFIDENTIAL AND IS SUPPLIED ON THE EXPRESS CONDITION THAT IT IS NOT TO BE USED FOR ANY PURPOSE OR COPIED OR COMMUNICATED TO ANY OTHER PERSON WITHOUT WRITTEN PERMISSION FROM DART AEROSPACE LTD.

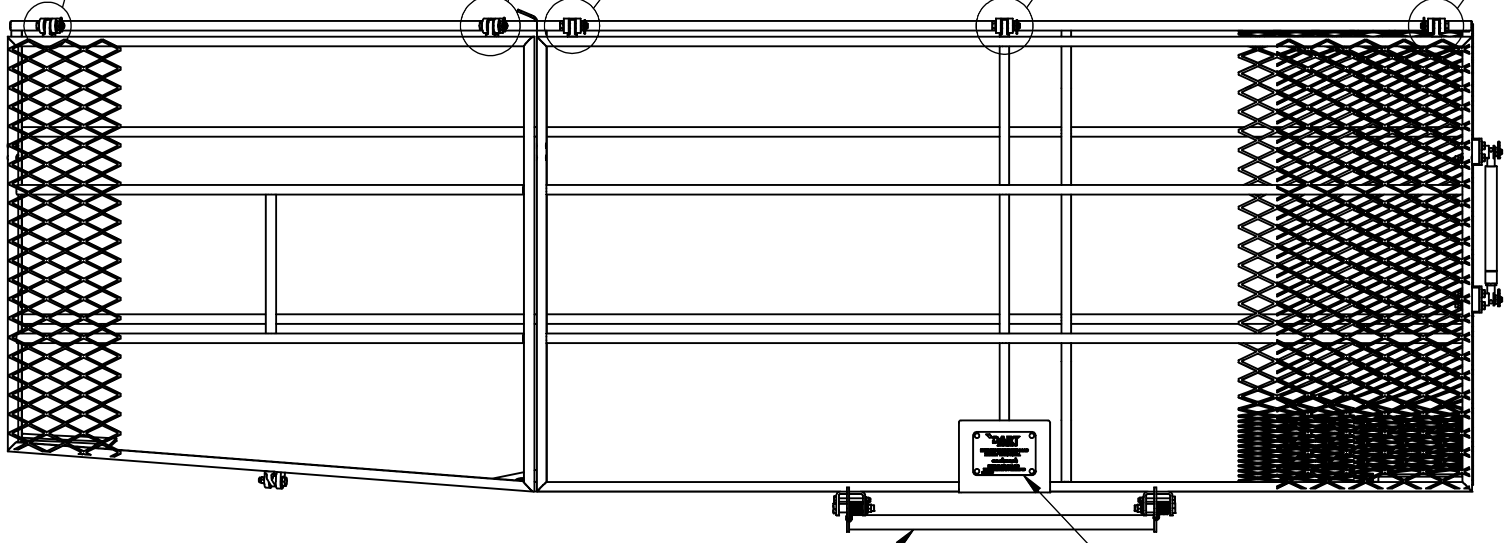

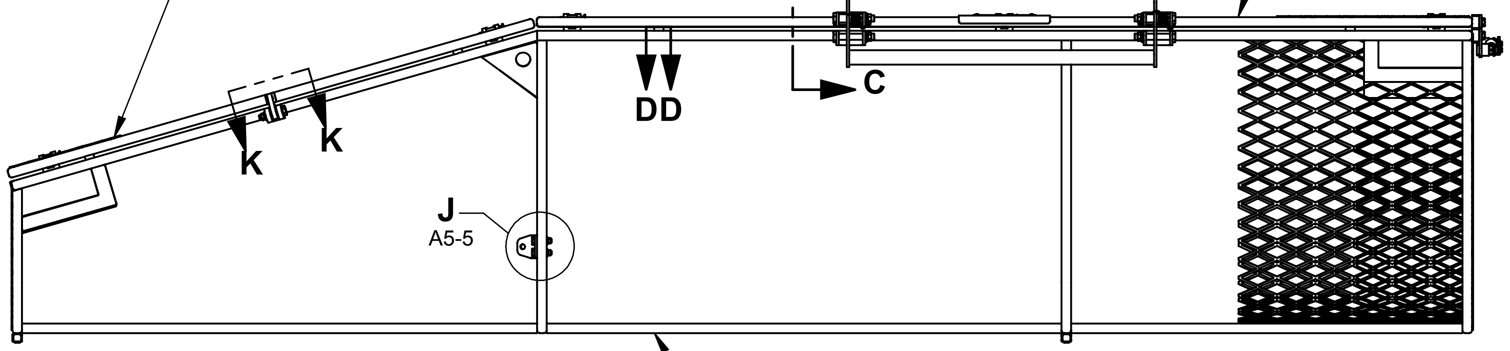

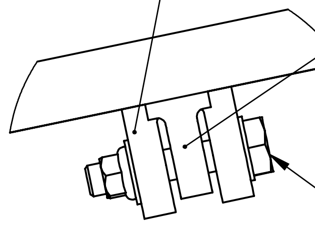

VIEW K-K

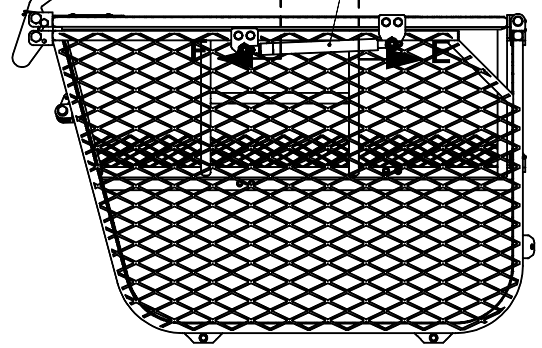

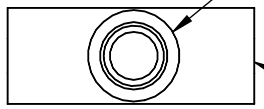

VIEW D-D
(LID ASSY REMOVED FOR CLARITY)

D5337-011 BASKET ASSEMBLY, LH

PRELIMINARY ISSUE

DESIGN	RF	**DART AEROSPACE LTD** HAWKESBURY, ONTARIO, CANADA
DRAWN	RF	
CHECKED	AK	DRAWING NO. D5337 — REV. A2 — SHEET 3 OF 5
MFG. APPR.	DD	
APPROVED		TITLE R66/R44 BASKET ASSEMBLY — SCALE NTS
DE APPR.		
DATE	15.08.10	

COPYRIGHT © 2015 BY DART AEROSPACE LTD
THIS DOCUMENT IS PRIVATE AND CONFIDENTIAL AND IS SUPPLIED ON THE EXPRESS CONDITION THAT IT IS NOT TO BE USED FOR ANY PURPOSE OR COPIED OR COMMUNICATED TO ANY OTHER PERSON WITHOUT WRITTEN PERMISSION FROM DART AEROSPACE LTD.

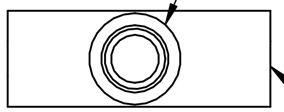

VIEW H-H
(LID ASSY REMOVED FOR CLARITY)

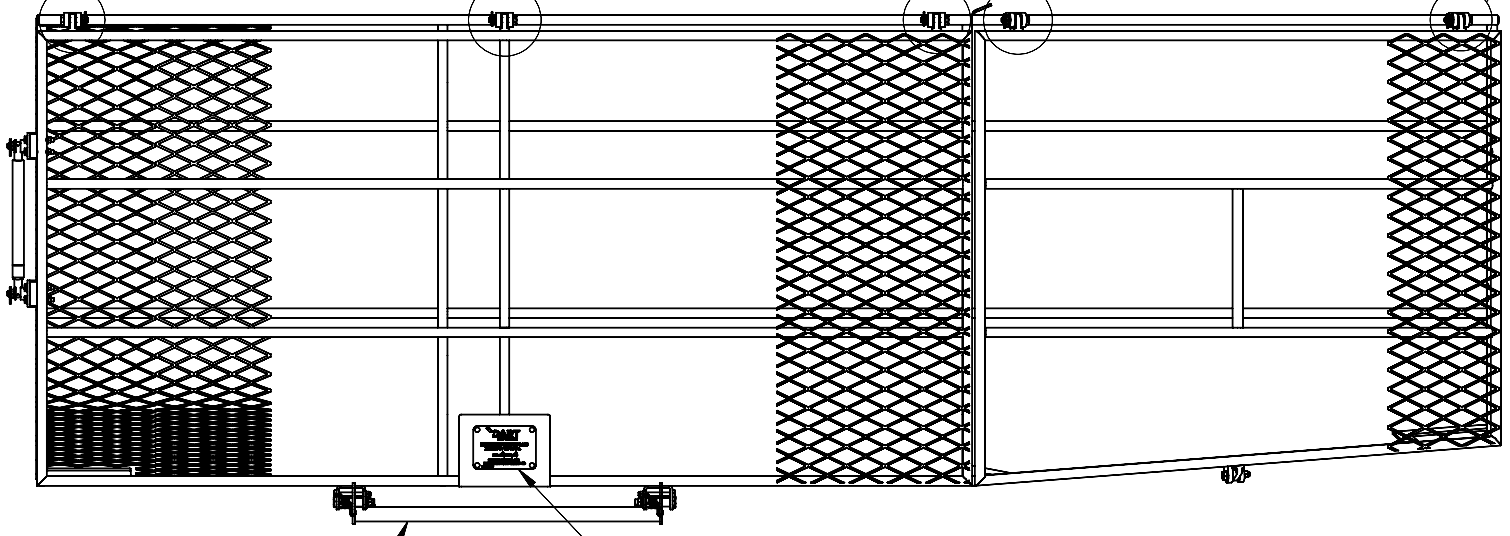

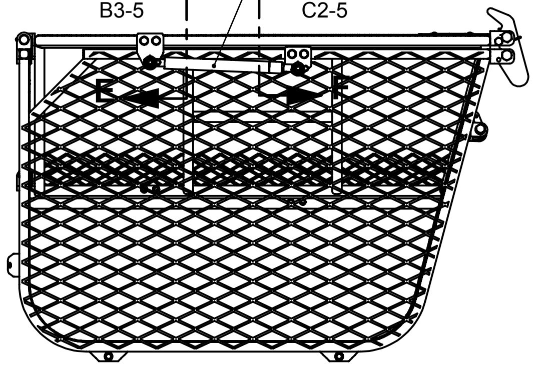

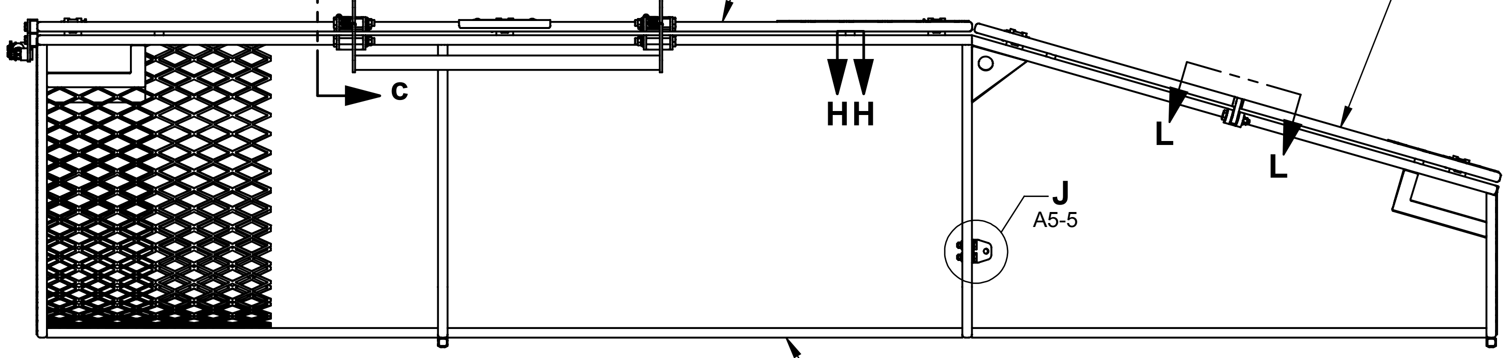

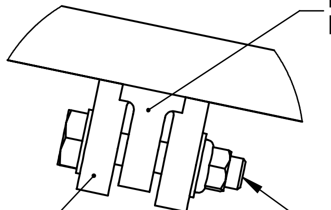

VIEW L-L

D5337-012 BASKET ASSEMBLY, RH

PRELIMINARY ISSUE

DESIGN	RF	**DART AEROSPACE LTD** HAWKESBURY, ONTARIO, CANADA
DRAWN	RF	
CHECKED	AK	DRAWING NO. D5337 — REV. A2 — SHEET 4 OF 5
MFG. APPR.	DD	
APPROVED		TITLE R66/R44 BASKET ASSEMBLY — SCALE NTS
DE APPR.		
DATE	15.08.10	

COPYRIGHT © 2015 BY DART AEROSPACE LTD
THIS DOCUMENT IS PRIVATE AND CONFIDENTIAL AND IS SUPPLIED ON THE EXPRESS CONDITION THAT IT IS NOT TO BE USED FOR ANY PURPOSE OR COPIED OR COMMUNICATED TO ANY OTHER PERSON WITHOUT WRITTEN PERMISSION FROM DART AEROSPACE LTD.

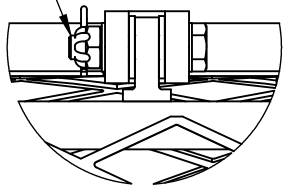

DETAIL A

D6-3
D3-3
D6-3
D5-4
D3-4
D2-4

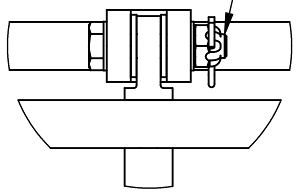

DETAIL B

D5-3
D4-4

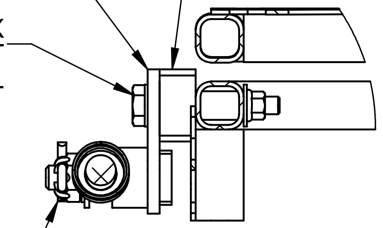

SECTION F-F

C2-3
B7-4

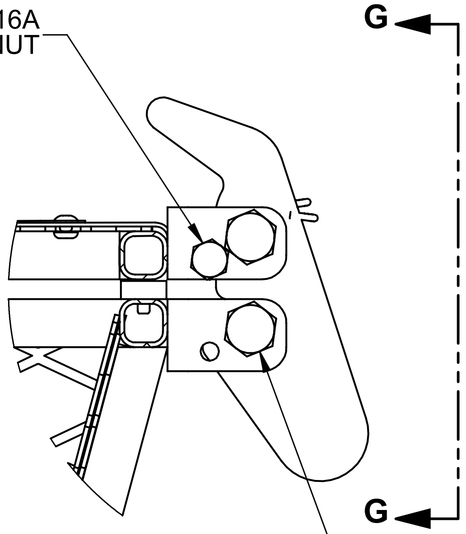

VIEW C-C
2 PL

D5-3
B5-4

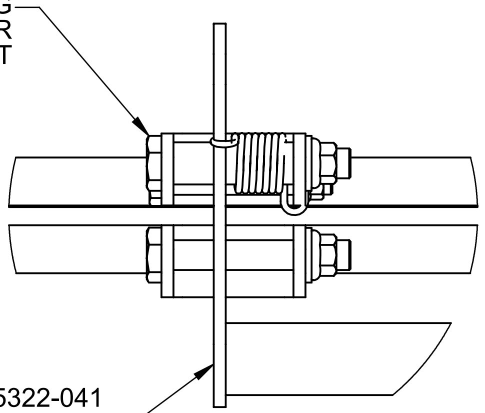

VIEW G-G
2 PL

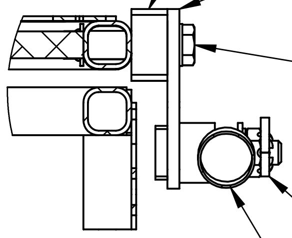

SECTION E-E

C2-3
B7-4

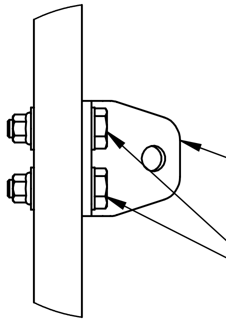

DETAIL J

B6-3
B3-4

PRELIMINARY ISSUE

DESIGN	RF	**DART AEROSPACE LTD** HAWKESBURY, ONTARIO, CANADA
DRAWN	RF	
CHECKED	AK	DRAWING NO. D5337 — REV. A2 — SHEET 5 OF 5
MFG. APPR.	DD	
APPROVED		TITLE R66/R44 BASKET ASSEMBLY — SCALE NTS
DE APPR.		
DATE	15.08.10	

COPYRIGHT © 2015 BY DART AEROSPACE LTD
THIS DOCUMENT IS PRIVATE AND CONFIDENTIAL AND IS SUPPLIED ON THE EXPRESS CONDITION THAT IT IS NOT TO BE USED FOR ANY PURPOSE OR COPIED OR COMMUNICATED TO ANY OTHER PERSON WITHOUT WRITTEN PERMISSION FROM DART AEROSPACE LTD.